FIELDBUS OVERVIEW

Graham Traill
02/09/2015

What is Fieldbus?

In its simplest form Fieldbus is a means of communicating with input devices (sensors, switches….) and output devices (valves, drives, indication lamps ….) without the need to connect each individual device back to the controller (PLC, Industrial PC etc).

In this overview we will explain the various Fieldbuses, their origins, applications and topologies

Why Fieldbus ?

Up to the late 1980's

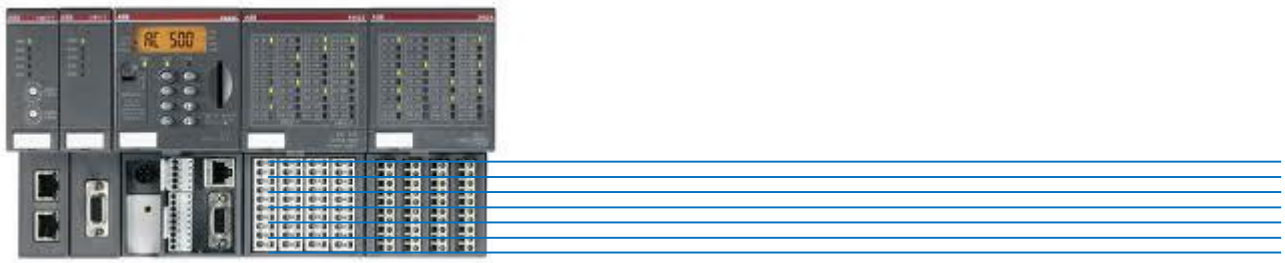

Devices individually wired

Late 1980's/early 90's onwards

Devices connected to 'remote I/O'

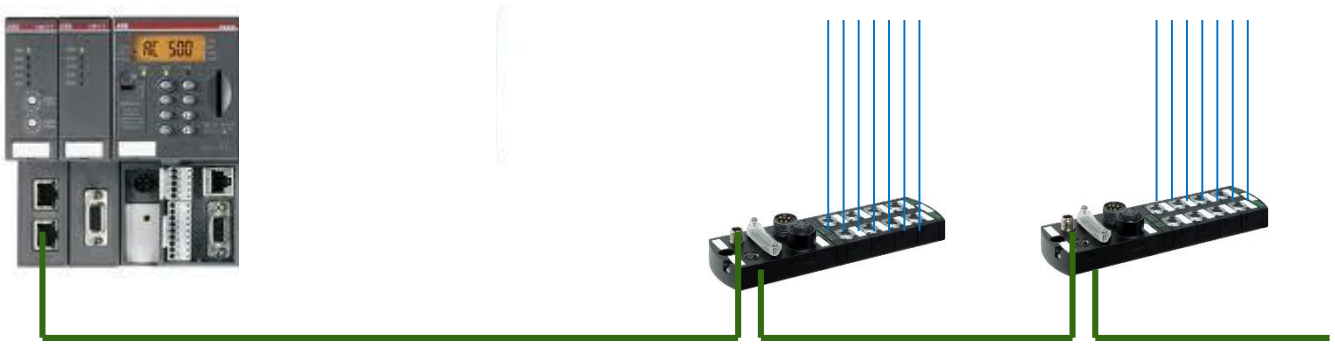

Fieldbus saves £££££

Fieldbus Variants

AS-Interface
CANopen
CC-Link
CompoNet
DeviceNet
Industrial EtherNET
EtherCAT
EtherNet/IP
Ethernet POWERLINK
Modbus
IO-Link
PROFIBUS
PROFINET
SERCOS interface
sercos the automation bus
SmartWire-DT The easy way to connect
VARAN

Why so many Fieldbuses

The manufacturers of automation equipment developed proprietary Fieldbuses with differing features and functions to best deal with their market niche and to compete with each other on a technical level. Therefore some buses are better at specific functions than others.

Nowadays most Fieldbuses claim to be ‘open’ (some more so than others). This was to some extent down to market pressure as large end users wanted to be able to connect and use the installed control platform (e.g. PLC) to communicate via the Fieldbus to specialist devices from a mix of manufacturers

This means that manufacturers of automation I/O devices such as Murrelektronik can develop products that will connect to the various Fieldbuses and ‘talk’ to the control platform.

We will have a look in a little detail at each of the Fieldbuses that interest us at Murrelektronik. Their applications and how we can benefit our customers

Example of a ‘large’ network

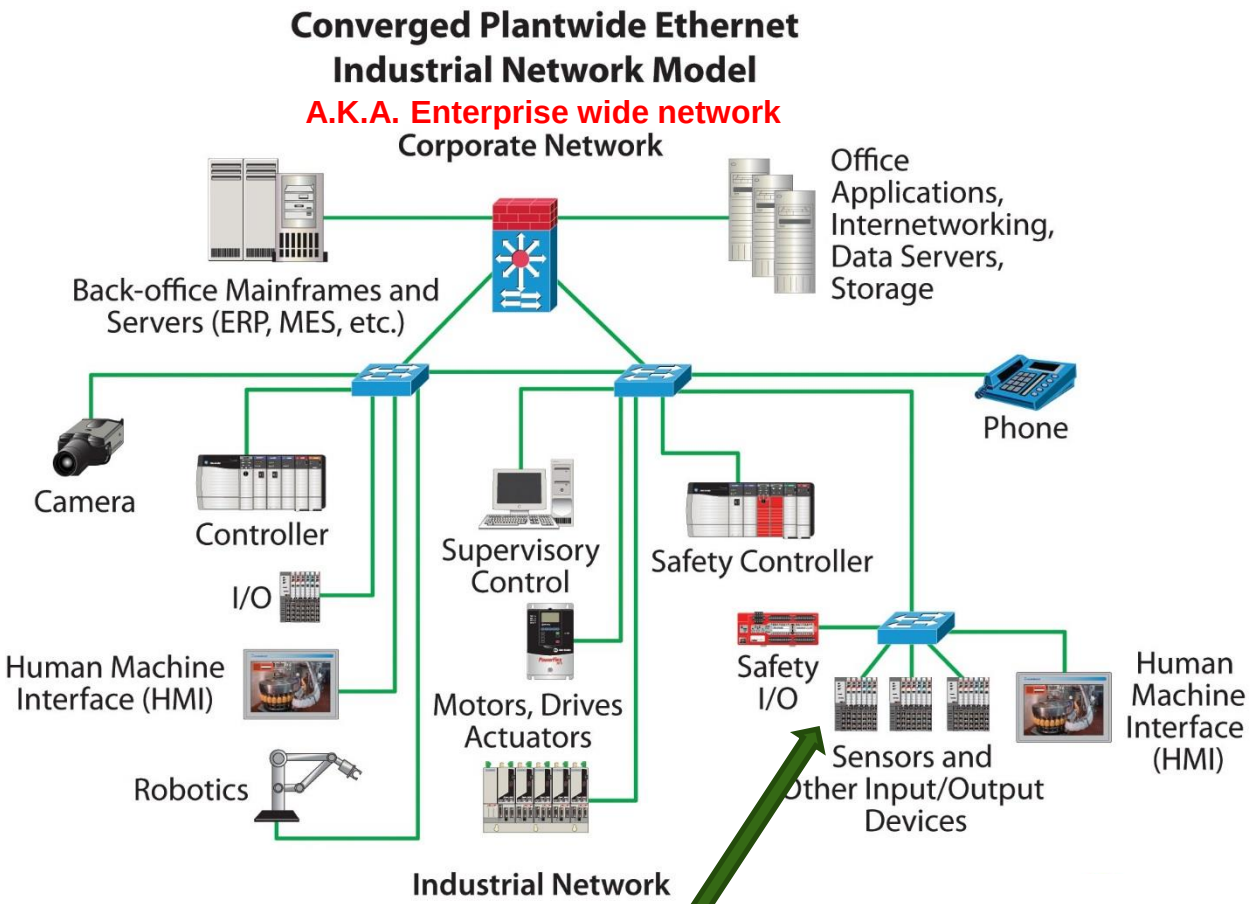

Murrelektronik Fieldbus I/O fits in here

Murrelektronik Provides I/O and Connectivityfor:

PROFIBUS®

PROFINET®

ASi INTERFACE

DeviceNet™

EtherNet/IP™

EtherCAT®

Modbus

CANopen

What belongs to who?

Fieldbus	Primary Control Platform vendor	User group
PROFIBUS	SIEMENS	PI PROFIBUS • PROFINET
PROFINET	SIEMENS	PI PROFIBUS • PROFINET
AS-Interface	**Consortium of 11 sensor companies**	**AS-International Association AS-Interface Expert Alliance**
DeviceNet	Rockwell Automation	ODVA
EtherNet/IP	Rockwell Automation	ODVA
CANopen	BOSCH	CiA
Modbus	Schneider Electric	Modbus MEMBER
EtherCAT	BECKHOFF	EtherCAT Technology Group
ETHERNET POWERLINK	B&R	ETHERNET POWERLINK Standardization Group

PROFIBUS (Process Field Bus) is a standard for fieldbus communication in automation technology and was first promoted in 1989 by BMBF (German department of education and research). Profibus is neither an openly published nor a royalty-free protocol.

PROFIBUS, is the world's most widely used fieldbus. It is standardized under IEC61158. It is supported by more than 1400 equipment vendors around the world including Murrelektronik

Profibus consists of several variations which are designed for use in special applications. The two Profibus versions most commonly used are Profibus-DP (Distributed Peripherals) and Profibus-PA (Process Automation).

Murrelektronik has a wide range of I/O for Profibus-DP

Profibus-DP specifications

Physical layer	RS-485				
Cabling	(1) shielded twisted pair for signal and (1) pair for 24 VDC supply				
Topology	Trunk with drops				
Cable length					
Baud rate (Kbits/sec)	93.75	187.5	500	1500	12000
Length (meters)	1200	1000	400	200	100
Number of devices	32 per segment; up to 126 with 4 repeaters				
Bus power	Must have auxiliary 24 VDC supply				
Transmission rate	9.6 K to 12 M bits/second				
Data access	Token sharing for multi-masters; peer-to-peer; multicast and cyclic polling for data transfer; acyclic for asset management				
Data transfer size	Up to 246 bytes of input & 246 bytes of output depending on device type.				
Device identity	Specific ID number for each device				
Error detection	HD4 CRC (Cyclic Redundancy Check)				
Support organization	Profibus users group www.profibus.com				

Murrelektronik Connectivity

IP 20 inside the panel – D-Sub9

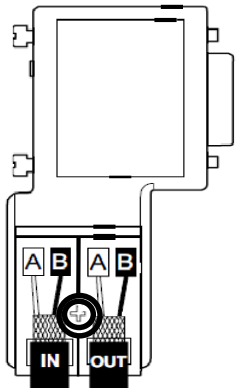

IP 67 on the machine – M12 B-coded

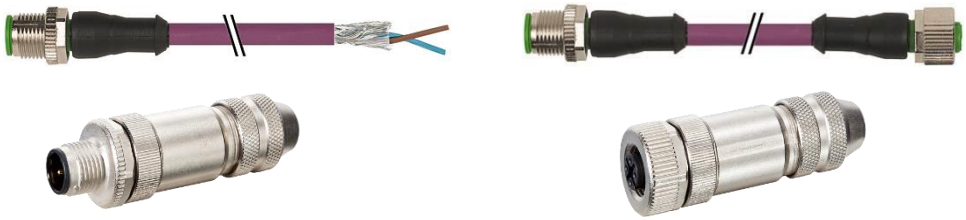

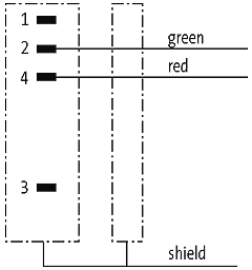

Pin assignment M12 B-coded

Many variants available. Website: http://www.murrelektronik.uk/

Murrelektronik Connectivity

Through panel interface

Control cabinet entry
M12 B-coded

B-coded bulk head

MPV frames and M12 B-coded inserts

Profibus cable

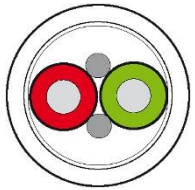

1 × 2 × 0.64 mm, Screened, 2 cable variants, 100 M to 500 M drums

Murrelektronik I/O Families

 Cube 67	 Cube 20	 Cube 20s
 Impact 67	 Impact 20	 MVK Metal

Many variants in each product family available. See website: http://www.murrelektronik.uk/

DeviceNet was originally developed by Allen Bradley (now owned by Rockwell Automation).

It is layered on top of the CAN (Controller Area Network) technology, developed by Bosch.

DeviceNet adapts the technology from ControlNet, which is another industrial protocol developed by Allen Bradley, and takes advantage of CAN, it is robust when compared to the traditional RS-485 based protocols.

In order to promote the use of DeviceNet worldwide, Rockwell Automation has adopted the "open" concept and decided to share the technology to third party vendors. It is now managed by the Open DeviceNet Vendors Association (ODVA), an independent organisation located in North America.

ODVA maintains the specifications of DeviceNet. In addition the ODVA ensures compliance to DeviceNet standards by providing conformance testing and vendor conformity.

CANopen

Development of the CAN bus started originally in 1983 at Robert Bosch GmbH. The protocol was officially released in 1986

The first CAN controller chips, produced by Intel and Philips, came on the market in 1987. Bosch published the CAN 2.0 specification in 1991.

CANopen was developed from CAN bus and is the internationally standardized (EN 50325-4) CAN-based higher-layer protocol for embedded control system. The CANopen specification comprises the application layer and communication profile as well as application, device, and interface profiles.

CANopen provides very flexible configuration capabilities. These specifications are developed and maintained by CiA members.

CANopen networks are used in a very broad range of application fields such as machine control, medical devices, off-road and rail vehicles, maritime electronics, building automation as well as power generation.

DeviceNet network specifications

Topology	Trunk line with drops and/or branches
Cabling	Two (2) separate shielded twisted pairs contained in one (1) shielded cable; may be thick trunk, thin trunk or flat cable.
Base technology	CAN (Controller Area Network)
Number of devices	62 per network
Data delivery	8 bytes of data for I/O; more if device supports fragmentation
Power	8 amps @ 24 VDC (thick cable) 4 amps @ 24 VDC (thin cable)
Cable length (thick)	Dependent on data rate and cable type (see table below)

		Drop length	
Data rate	Trunk length	Maximum	Cumulative
125 Kbaud	500 m (1,640 ft)	6 m (20 ft)	156 m (512 ft)
250 Kbaud	250 m (820 ft)	6 m (20 ft)	78 m (78 ft)
500 Kbaud	100 m (328 ft)	6 m (20 ft)	39 m (129 ft)

Cable length (thin)	100 m (328 ft)
Communication methods	• Master/slave polling • Cyclic polling • Change of state • Strobed I/O • Explicit messaging
Data signal	Square wave digital with non return to zero encoding.
Error detection	Automatic retransmission of corrupted messages and autonomous switching off of defective nodes.
Address setting	On-line via DeviceNet configuration software and PC interface module; off-line with dip switches.
Support organization	Open DeviceNet vendor Assn. www.odva.org.

MURR ELEKTRONIK
stay connected

Topology

CANopen and DeviceNet topology is very similar. This is because both protocols where born out of CAN bus developed by Bosch.

Beware there are some differences. But for immediate purposes assume the same topology.

You will in all probability come across more DeviceNet than CANopen. Due to the prevalence of Rockwell in the market place

Topology (‘line’ and ‘line and drop’)

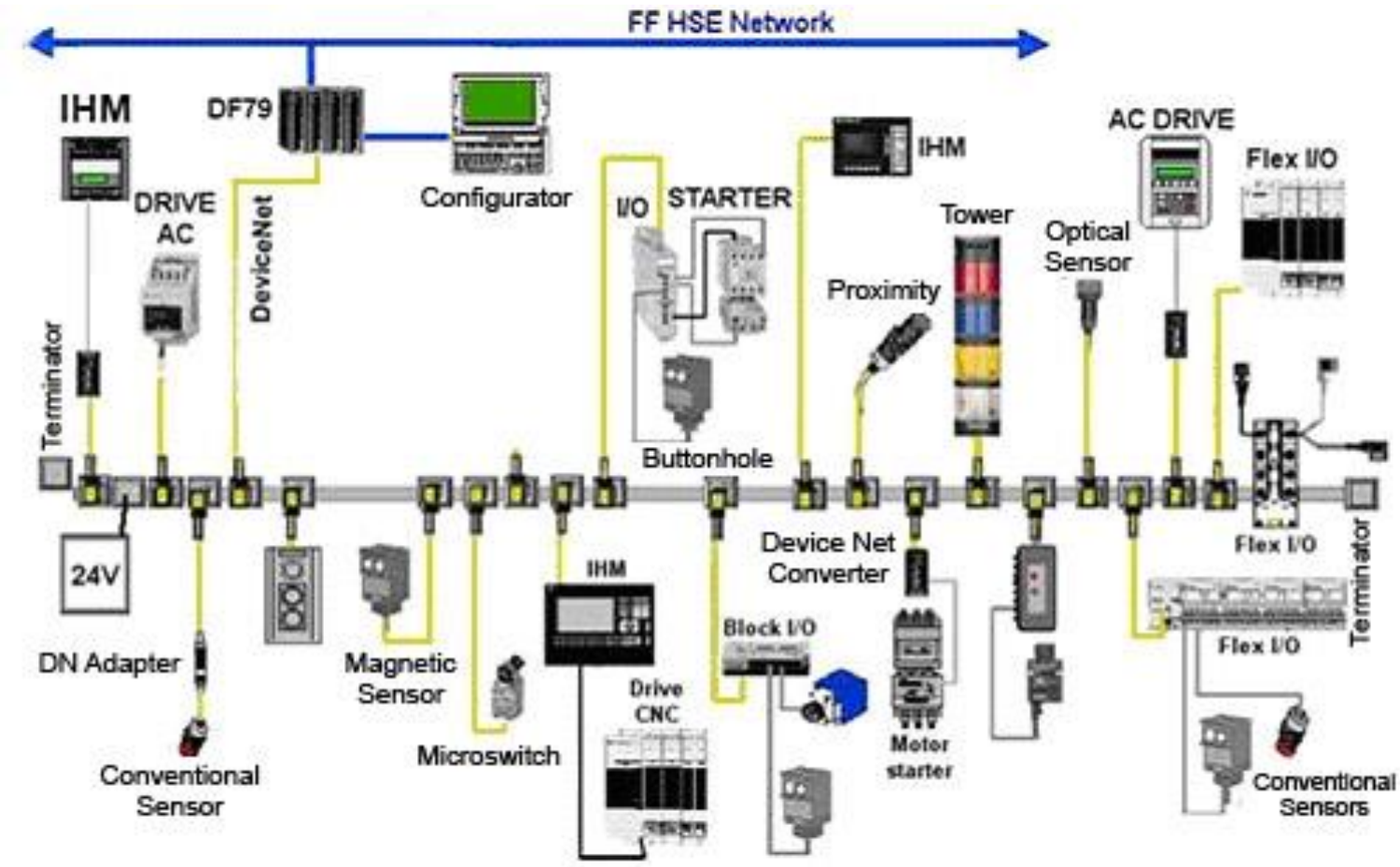

Connectivity

DeviceNet CANopen

MURR ELEKTRONIK
stay connected

IP 20 inside the panel – D-Sub9

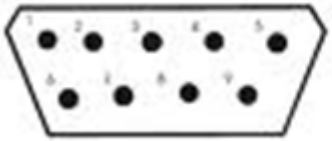

SUB-D-9
2 CAN -
3 Drain
7 CAN +

IP 67 on the machine – M12 A-coded

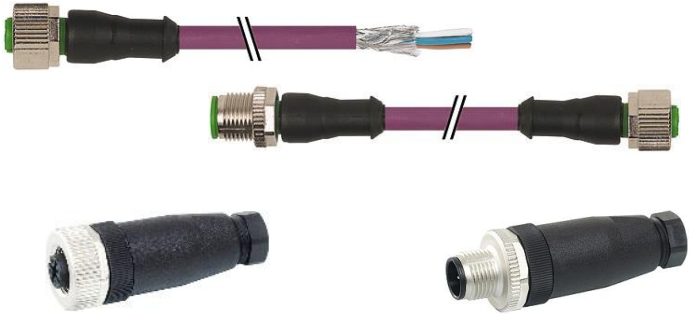

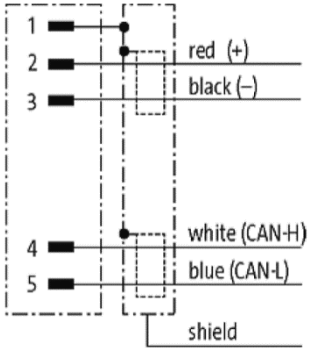

M12 A coded

1 Drain, blank
2 24 V, red
3 0 V, black
4 CAN+, white
5 CAN-, blue

Many variants available. Website: http://www.murrelektronik.uk/

Connectivity

Through panel interface

Control cabinet entry
M12 A-coded

A-coded bulk head

MPV frames and M12 A-coded inserts

ME I/O families for for DeviceNet CANopen

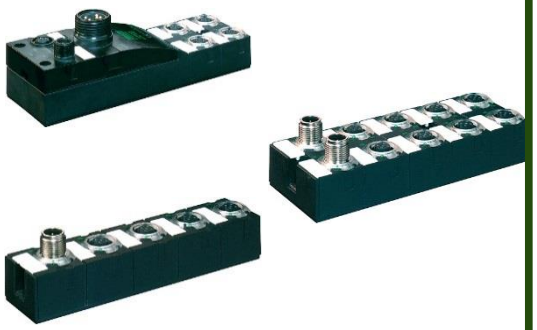 Cube 67	 Cube 20s	 Impact 67
 Impact 20	CANopen **only**  MVK Metal	

Many variants in each product family available. See website: http://www.murrelektronik.uk/

Ethernet based protocols

Ethernet based protocols are for most applications now the networks of choice. The reasons for the success of Ethernet networks is that they offer greater flexibility in their topology architecture than the traditional Fieldbus.

What is Ethernet ?

Ethernet is a means of transmitting a signal between two or more devices over a shared medium.

- It is NOT a protocol
- Ethernet is purely concerned with the medium used, the way the signal is put onto that medium, and what form that signal takes.
- Profinet, Ethernet I/P, Ethercat, and Powerlink are protocols that have been developed to use the Ethernet Category 5 standard

Ethernet Topology

Ethernet networks can be constructed in a number of ways : -

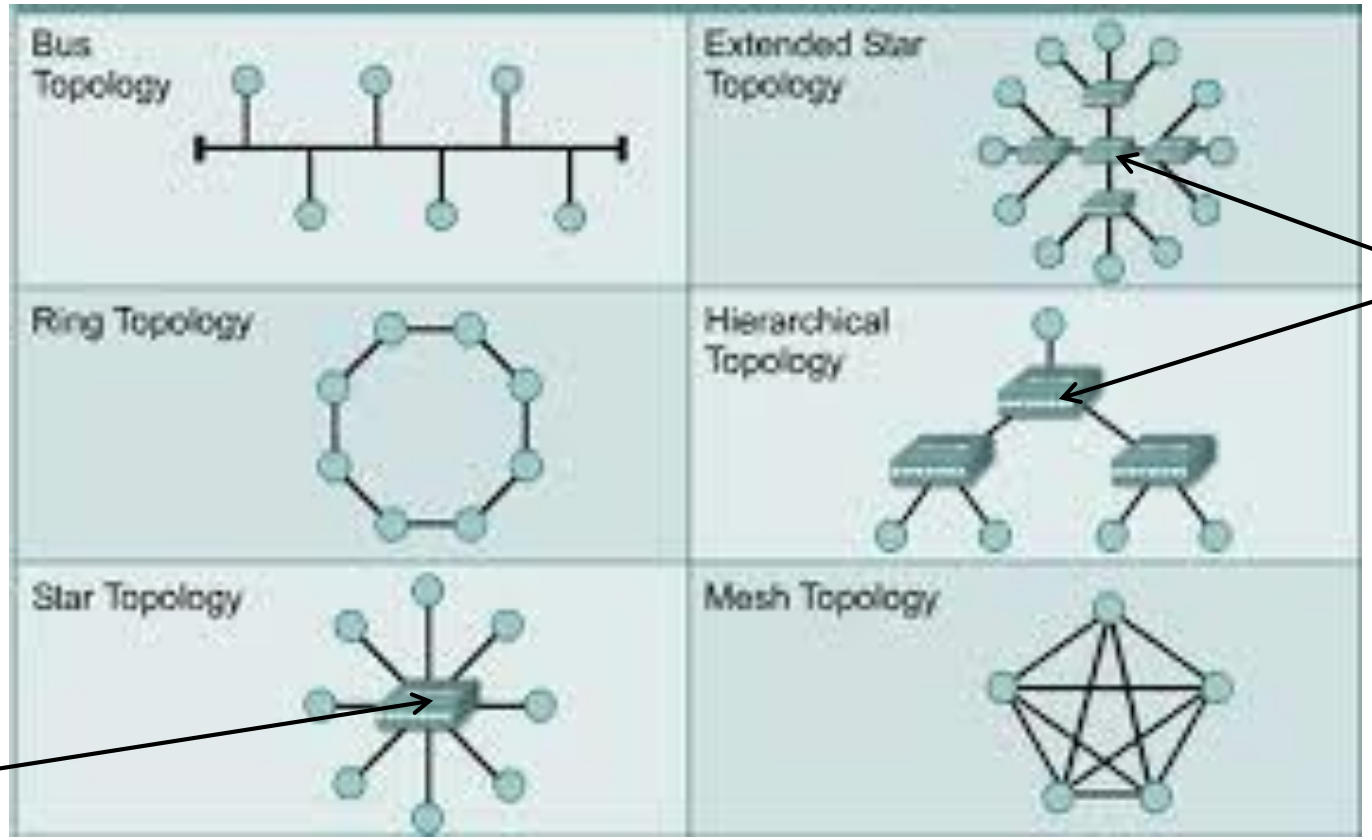

Ethernet switches

Ethernet switch

Plantwide Ethernet network

Managed switches

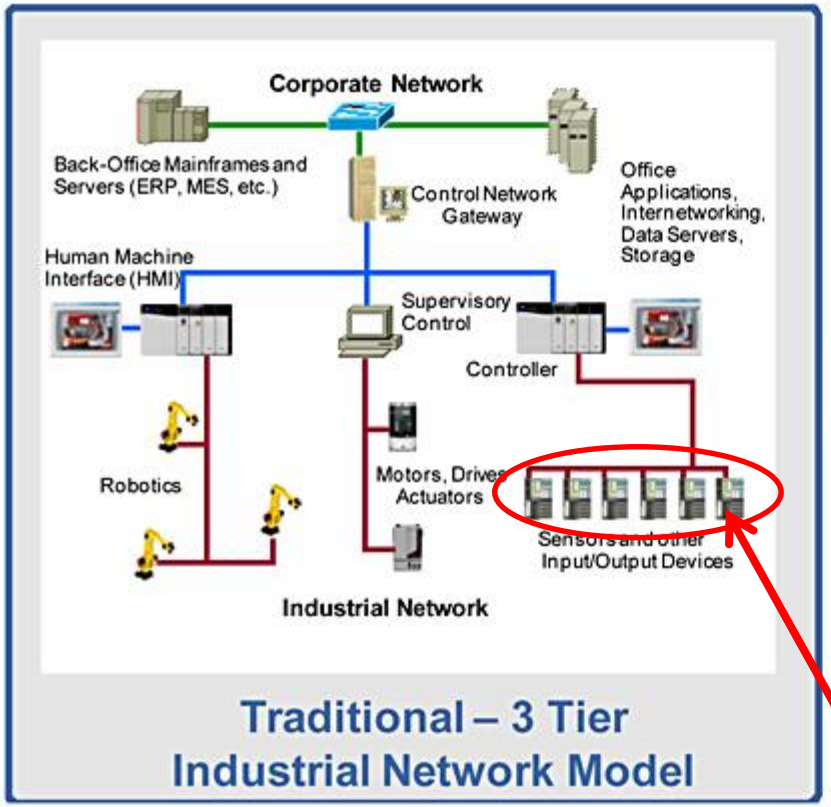

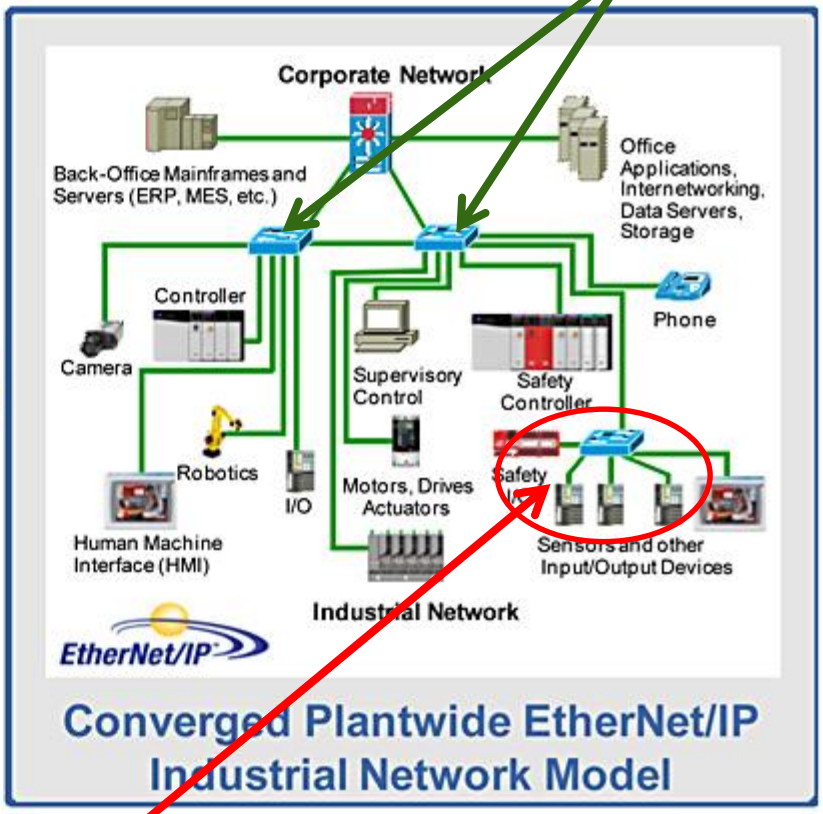

Fieldbus network usually has a line topology only (e.g. Profibus, DeviceNet)

Ethernet networks using line and star topology

Murrelekronik products

Industrial Ethernet

Application Example

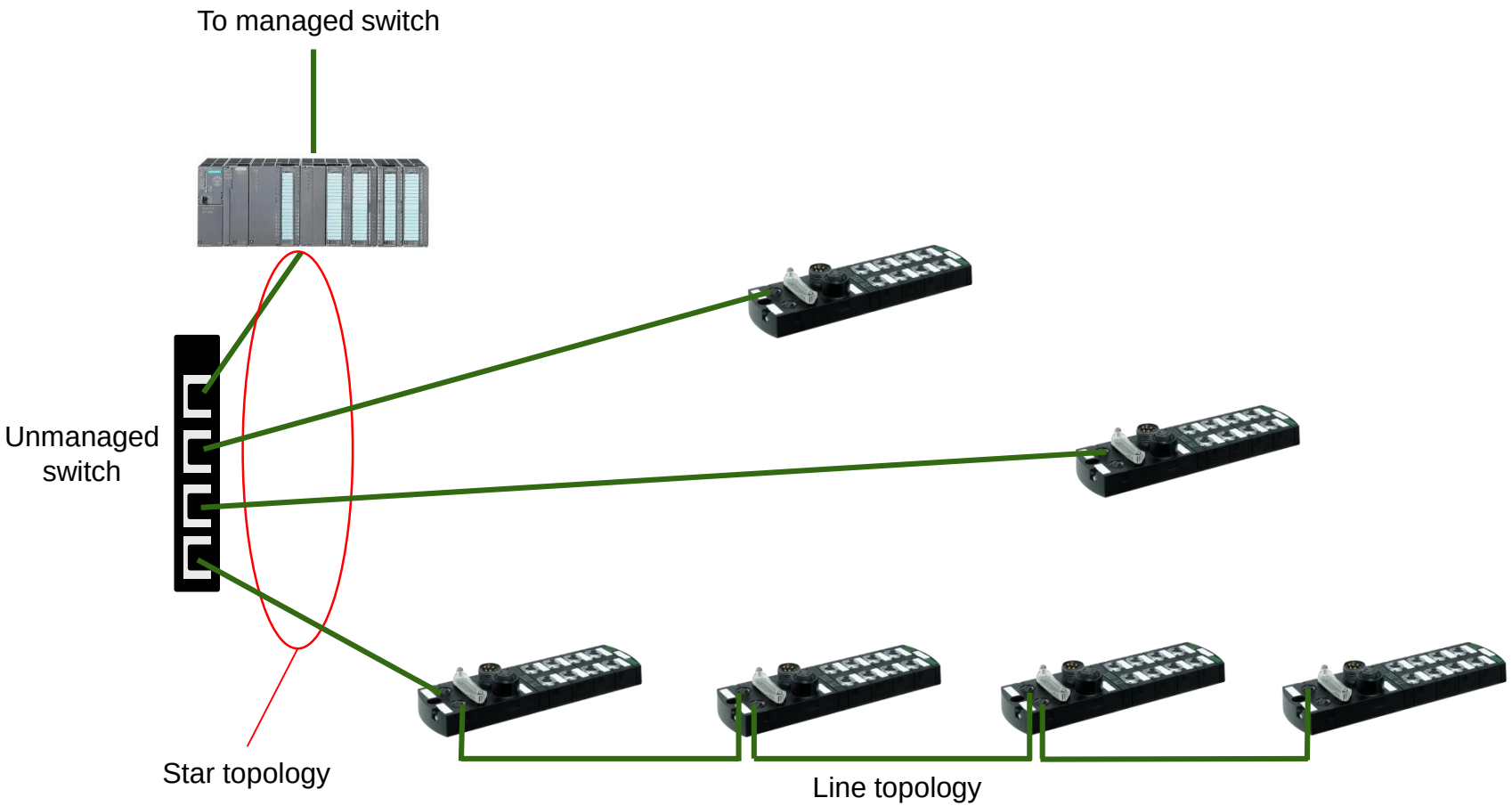

ME I/O families for PROFINET EtherNet/IP EtherCAT

MURR ELEKTRONIK
stay connected

Cube 67

Cube 20

Cube 20s

Impact 67

Impact 20

MVK Metal

Many variants in each product family available. See website: http://www.murrelektronik.uk/

Connectivity for PROFINET EtherNet/IP EtherCAT

IP 20 inside the panel – RJ45

Many variants see catalogue

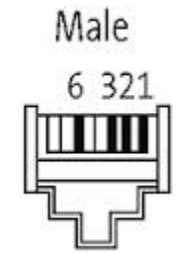

Pin assignment
RJ45

IP 67 on the machine – M12 D-coded

Many options see catalogue

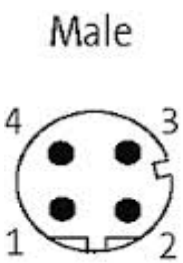

Pin assignment
M12 D-coded

Many variants available. Website: http://www.murrelektronik.uk/

Connectivity for PROFINET EtherNet/IP EtherCAT

MURR ELEKTRONIK
stay connected

Through panel interface

Control cabinet entry
M12 D-coded

D-coded bulk head

M12 to RJ45 Through
panel adaptor

MPV frames and M12 D-coded
to RJ45 inserts

Ethernet Cat 5 cable

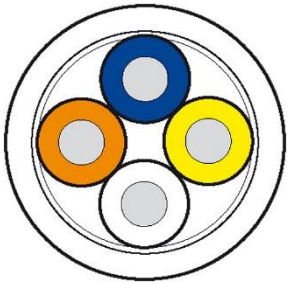

2 x 2 x 0.34²

4 cable variants

Switches for PROFINET EtherNet/IP

58151 – 4 port unmanaged Ethernet switch

58170 – 6 port unmanaged Ethernet switch

58172 – 6 port unmanaged Ethernet switch

58152 – 8 port unmanaged Ethernet switch

58171 – 8 port unmanaged Ethernet switch

58160 – IP67 4 port unmanaged Ethernet switch

58161 – IP67 8 port unmanaged Ethernet switch

What is AS-Interface

AS-Interface was developed during the late 1980 and early 1990 by a group (consortium) of 11 companies mostly known for their offering of industrial non-contact sensing devices

AS-Interface (AS-i) is the simplest of the industrial networking protocols used in PLC, DCS and PC-based automation systems. It's designed for connecting binary (ON/OFF) devices such as actuators and sensors in discrete manufacturing and process applications using a single cable. It is an 'open' technology supported by 100s of automation vendors. Well over 20 Million AS-i field devices are installed and proven globally.

Key data per AS-i network	
Number of slaves	Up to 62
Number of I/Os	Up to 496 inputs and 496 outputs
Topology	Any, combinable, no termination resistors
Medium	Unshielded two-wire line for data and energy
Line length	100 m as a standard, extendable to 600 m with Repeater and Extension Plug
Cycle time	5 ms (typical)
Data transfer	Digital and analog (16 bit

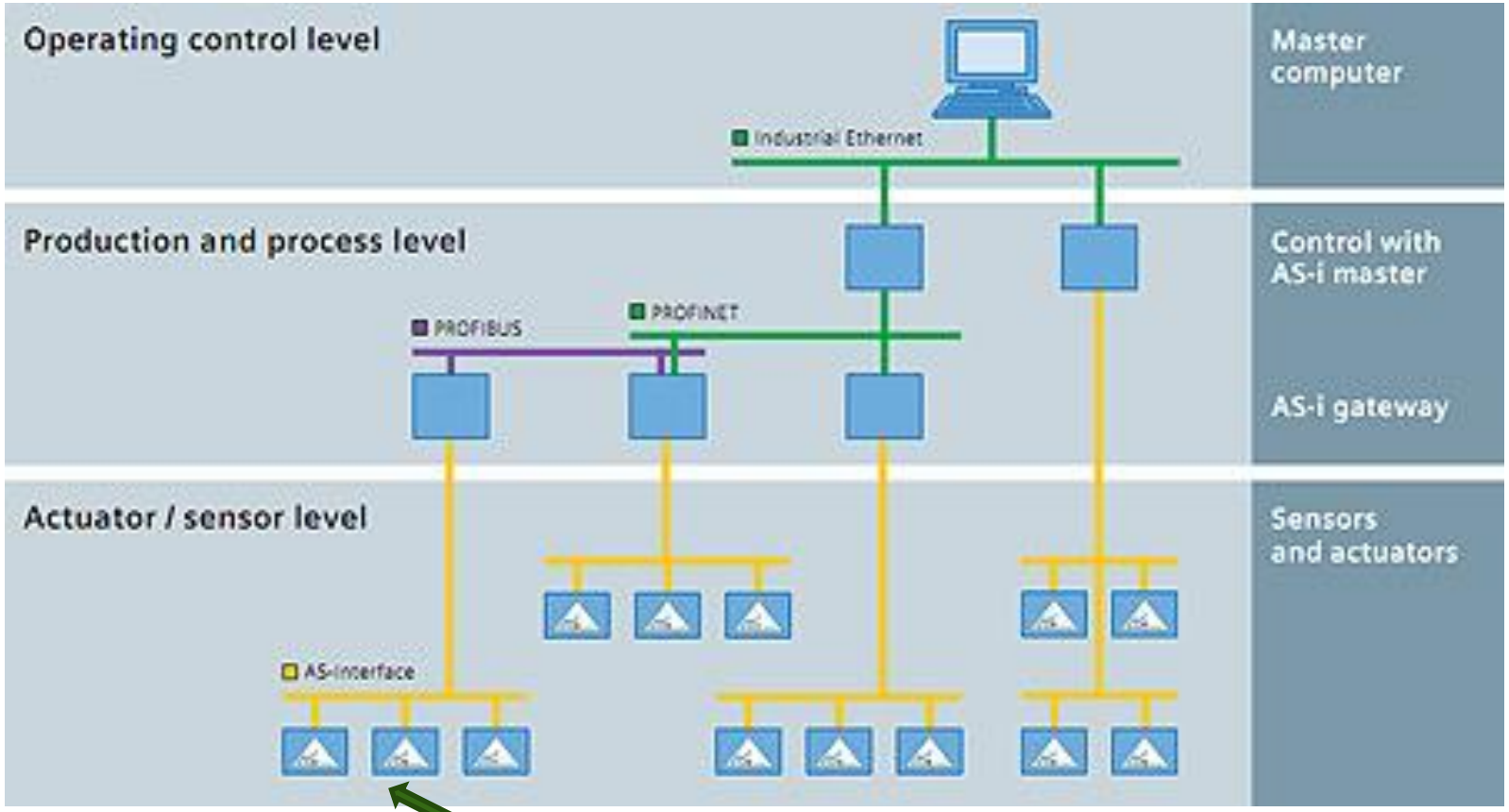

This is our bit

Murrelektronik AS-I family

 MASI IP20 I/O	 MASI65 IP65 I/O	 MASI67 IP67 I/O
 MASI68 IP68 I/O	 AS-I gateways	 AS-I 30.5 A DC PSU's

Many variants available. Website: http://www.murrelektronik.uk/

Murrelektronik AS-I family

 MASI addressing device	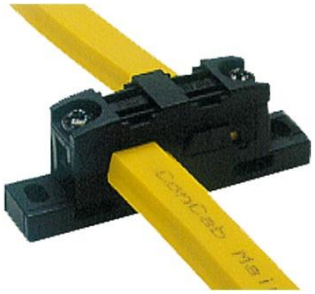 MASI65 IP65 I/O	 Distribution box for round cables
 AS-I adaptor from profile cable to M12	 AS-I profile cable yellow and black	 AS-I profile cable entries

IO-Link

IO-Link is **NOT** a Field bus it is a means of Point-to-Point communication.

IO-Link is a standardised IO technology (IEC 61131-9) for communication with sensors and actuators. The point-to-point communication is based on the established 3-wire sensor and actuator connection. There is no requirement for special screened cables. IO-Link is not a fieldbus but a further development of the existing, tried-and-tested connectivity technology for sensors and actuators.

The connection between IO-Link master and device is established via a max. 20 m long, unscreened 3-wire cable. The wiring is standardised on the basis of M5, M8 and M12. The vast majority of IO-Link devices are equipped with M12 connectors that can be used without any restrictions for IO-Link's switching mode and communication mode. Each port of an IO-Link master is capable of processing binary switching signals and analogue values (e.g. 8 bits, 12 bits, 16 bits). Serial IO-Link communication takes place via the same port. Easy wiring, automated parameter setting and extended diagnosis are the advantages of IO-Link.

As a standard, 2 bytes of process data are available per cycle. The transmission between IO-Link master and device takes 400 µs at a speed of 230 kBaud. The user can also choose larger frame types. Therefore, greater process data with up to 32 bytes length can also be transmitted at a correspondingly lower cycle time. To ensure that the parameter data of a device is not lost when replacing a device, they can be automatically stored directly in the IO-Link master. If a new, identical substitution device is connected, the parameters of the previous device are automatically transferred onto the new device.

Each IO-Link device has an IODD (IO Device Description). This is a device description file which contains information about the manufacturer, article number, functionality etc. This information can be easily read and processed by the user. Each device can be unambiguously identified via the IODD as well as via an internal device ID.

What is IO-Link

IO-Link provides a communication link for digital technology replacing traditional analogue technology (0-10v, 4-20mA etc.) with robust 24 V DC communication combining parameterisation and diagnostic features.

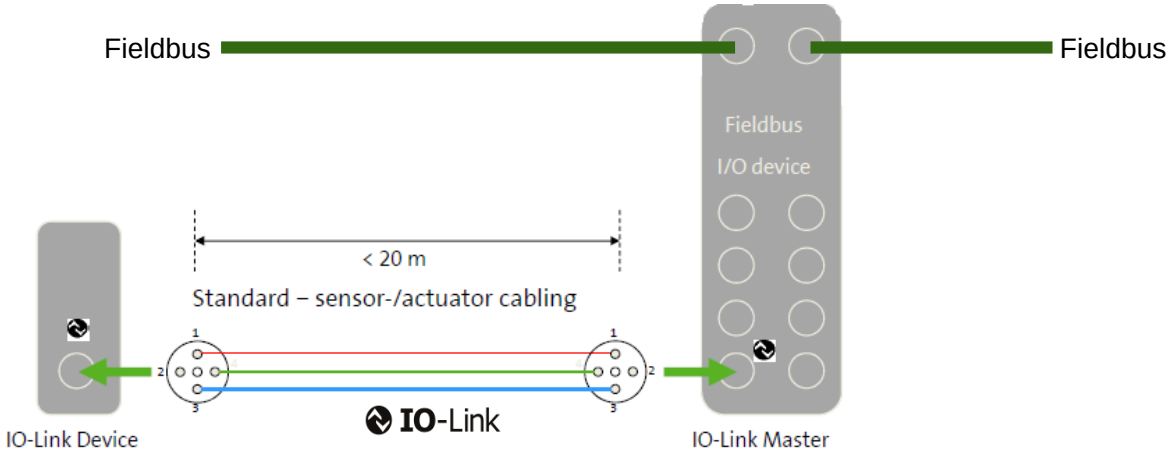

What is IO-Link

Both standard binary (on/off) devices and IO-Link devices can be connected to an IO-Link port. Pin 4 on the standard M12 connector is used for either binary (On/Off) or IO-Link data communication.

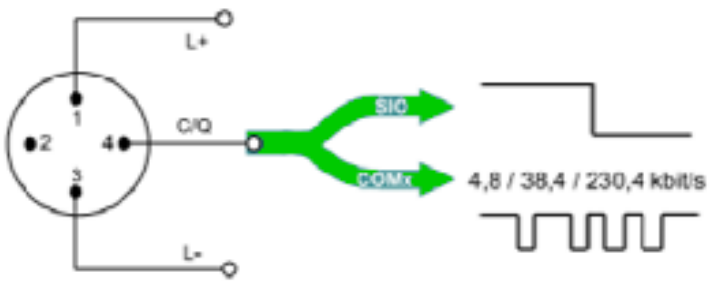

IEC 60947-5-2

Pin	Signal	Definition	Standard
1	L+	24 V	IEC 61131-2
2	I/Q	Not connected, DI, or DO	IEC 61131-2
3	L-	0 V	IEC 61131-2
4	Q	"Switching signal" DI (SIO)	IEC 61131-2
	C	"Coded switching" (COM1, COM2, COM3)	IEC 61131-9

IO-Link Applications

A typical IO-Link application for example pressure switches. On a standard digital input the pressure switch parameters need to be set up (switching point, alarm point, span etc.) manually using push buttons on the device or via a USB port mounted on the device. This can be time consuming and is not ‘user friendly’ as the parameters need to be written down and retained in case of changes or replacement. With IO-Link devices parameters can be set up in the device via the field bus and IO-Link communication.

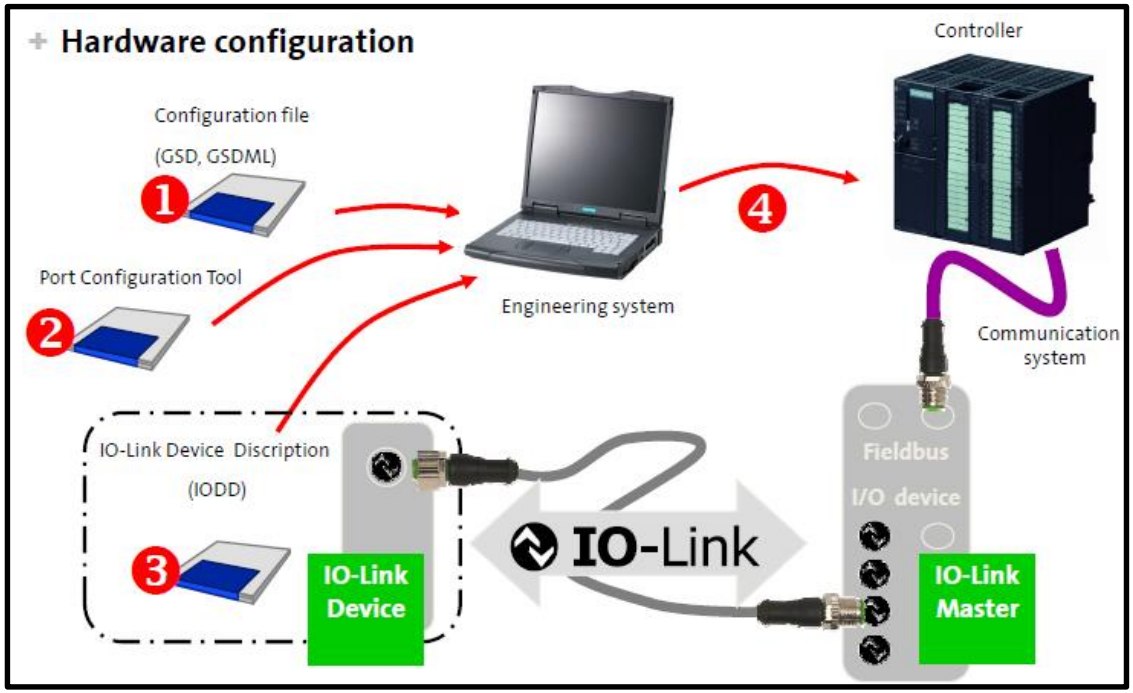

IO-Link Applications

IO-Link devices can offer cost advantages . IO-Link sensors tend to be less expensive than standard sensors due to the fact that they do not require push buttons and displays

There is no requirement for shielded cables as standard M12 leads are used

IO-Link offers a wiring standard - with analogue sensors there are no standards. They can be 2, 3, or 4 wire devices with no standard pin configuration for connectivity. This can cause

£194

IO-Link pressure switch

£267

Standard pressure switch

Note: The above prices are typical and do not reflect prices from any particular vendor

IO-Link Applications

Automation systems as a whole tend to use simple two position binary devices such proximity switches and limit switches. These types of devices do not require parameterisation therefore there is little or no advantage in using IO-Link.

- **Binary sensors**
  - capacitive and inductive sensors
  - no parameters

- **Standardized M12 connectors, binary**
  - upto 2 channels per port
  - if needed diagnostics (Pin 2)

90...95%

- **Analog and complex sensors / actuators**
  - Pressure / distance / temperature / level / ...
  - Parameter settings
- **Standardized M12 connectors, analog**
  - typically 1 channel per port
  - no standardized pin assignment
  - sensitive signals

IO-Link

5...10%

IO-Link Versions

Their two versions for IO-Link V1.0 and V1.1. This is important for the following reasons:

- Only IO-Link devices according to V1.0 will work with a master complying to V1.0
- IO-Link devices complying to V1.0 and V1.1 can be operated on a V1.1 master
- The additional functions offered with V1.1 will only work if both master and device comply with V1.1

IO-Link Murrelektronik solution

Cube 67

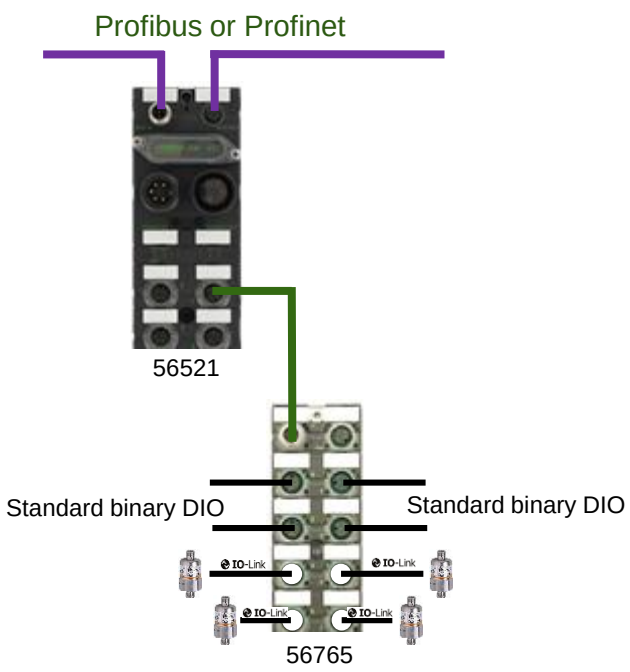

MVK

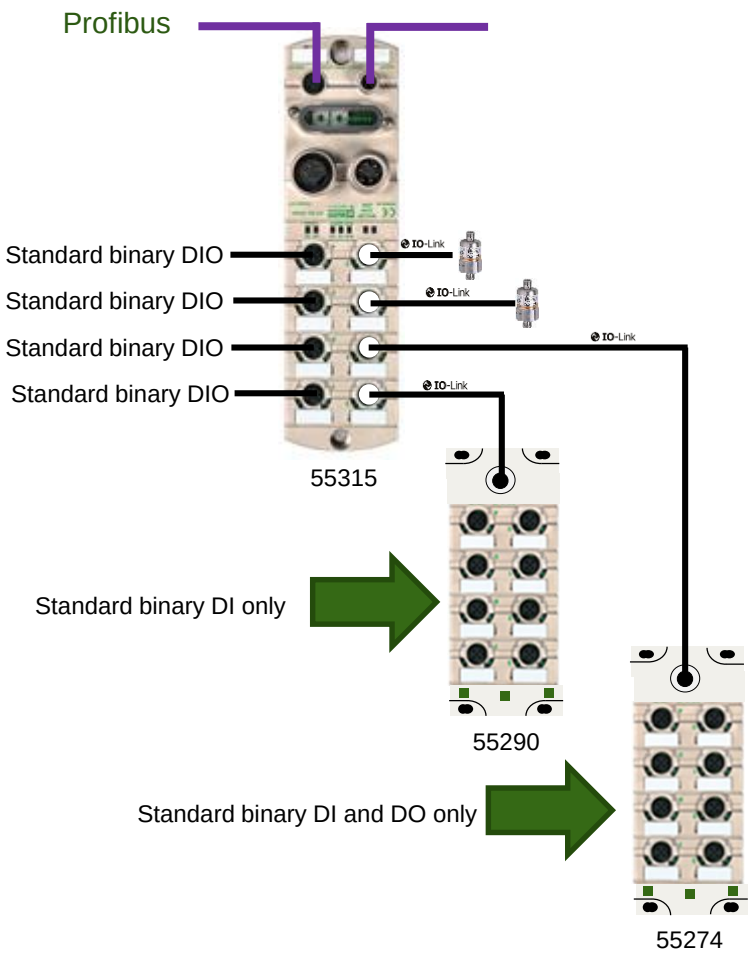

IO-Link Group members

34

52

2004 | 2006 | 2008 | 2010 | 2012 | 2014

Examples of Fieldbus Topologies

HPU unit manifold No.7

56613 – DI8 E
7 x DI
Return filter PS2
Pressure filter 1 PS3
Pressure filter 2 PS4
Emergency pressure filter PS5
Filtration pump LS7
Pump No.1 LS8
Pump No.2 LS9

HPU unit manifold No.6

56640 - DIO 16, 1.6 A outputs
3 x DO, 6 x DI
Emergency ONG travel SOL 64A & 64b
Emergency pump unload SOL 001
Filtration sys. filter PS6
Oil temp TS1
Oil press SP 1
Oil press SP 2
Oil level sensor OP1
Oil level sensor OP2

HPU unit manifold No.6

56731 – AI4, 0(4)-20mA
2 x AI
Oil temp. sensor TS1
Oil Press. Sensor PS1

HPU unit manifold No.5

56641 - DIO32, 16 x 2 A + 1 x 1.6 A outputs
15 x DO
7 x double sol valves
1 x single sol valve

HPU unit manifold No.4

56641 - DIO32, 16 x 2 A + 1 x 1.6 A outputs
15 x DO
7 x double sol valves
1 x single sol valve

HPU unit manifold No.3

56641 - DIO32, 16 x 2 A + 1 x 1.6 A outputs
15 x DO
7 x double sol valves
1 x single sol valve

HPU unit manifold No.2

56641 - DIO32, 16 x 2 A + 1 x 1.6 A outputs
15 x DO
7 x double sol valves
1 x single sol valve

HPU unit manifold No.1

56641 - DIO32, 16 x 2 A + 1 x 1.6 A outputs
15 x DO
7 x double sol valves
1 x single sol valve

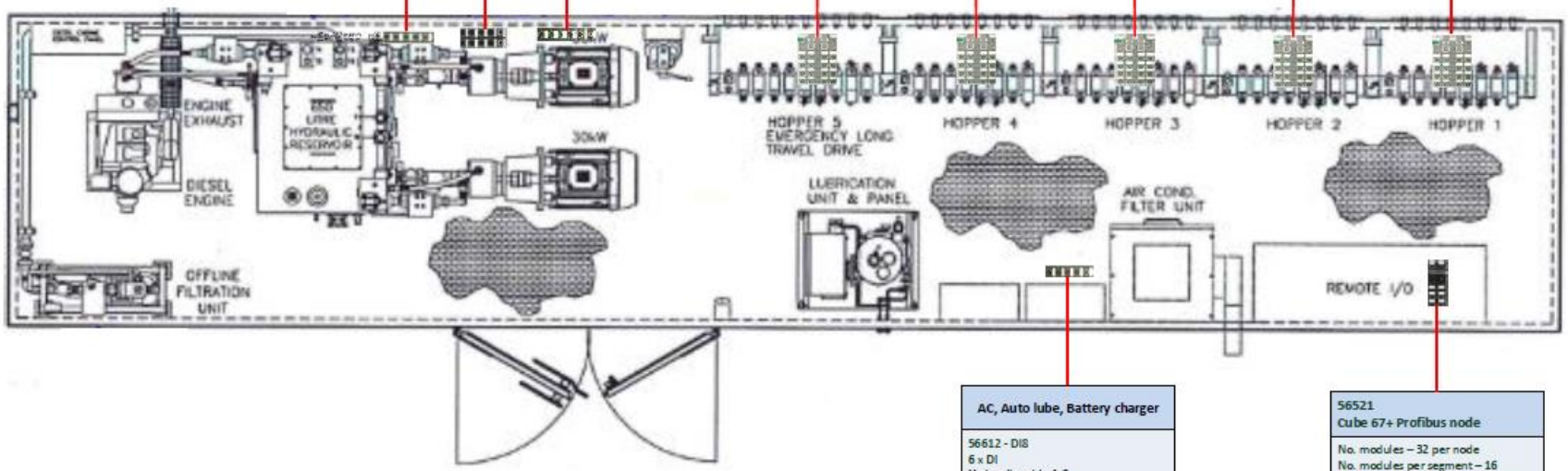

AC, Auto lube, Battery charger

56612 - DI8
6 x DI
Hydraulic cabin A.C.
Auto. Lube unit
Battery charger control panel

56521
Cube 67+ Profibus node

No. modules – 32 per node
No. modules per segment – 16
Max. distance per segment - 30 M

connec+ivity® by Murrelektronik	Murrelektronik Ltd 5 Albion St, Pendlebury Ind. Est. Swinton, Manchester, M27 4FG	Customer: Project:	Cube 67+ module layout	Sales Engineer: Alison Ingham Drawn by: Graham Traill	Date: 10/02/2015 Drawing. No: 2.01

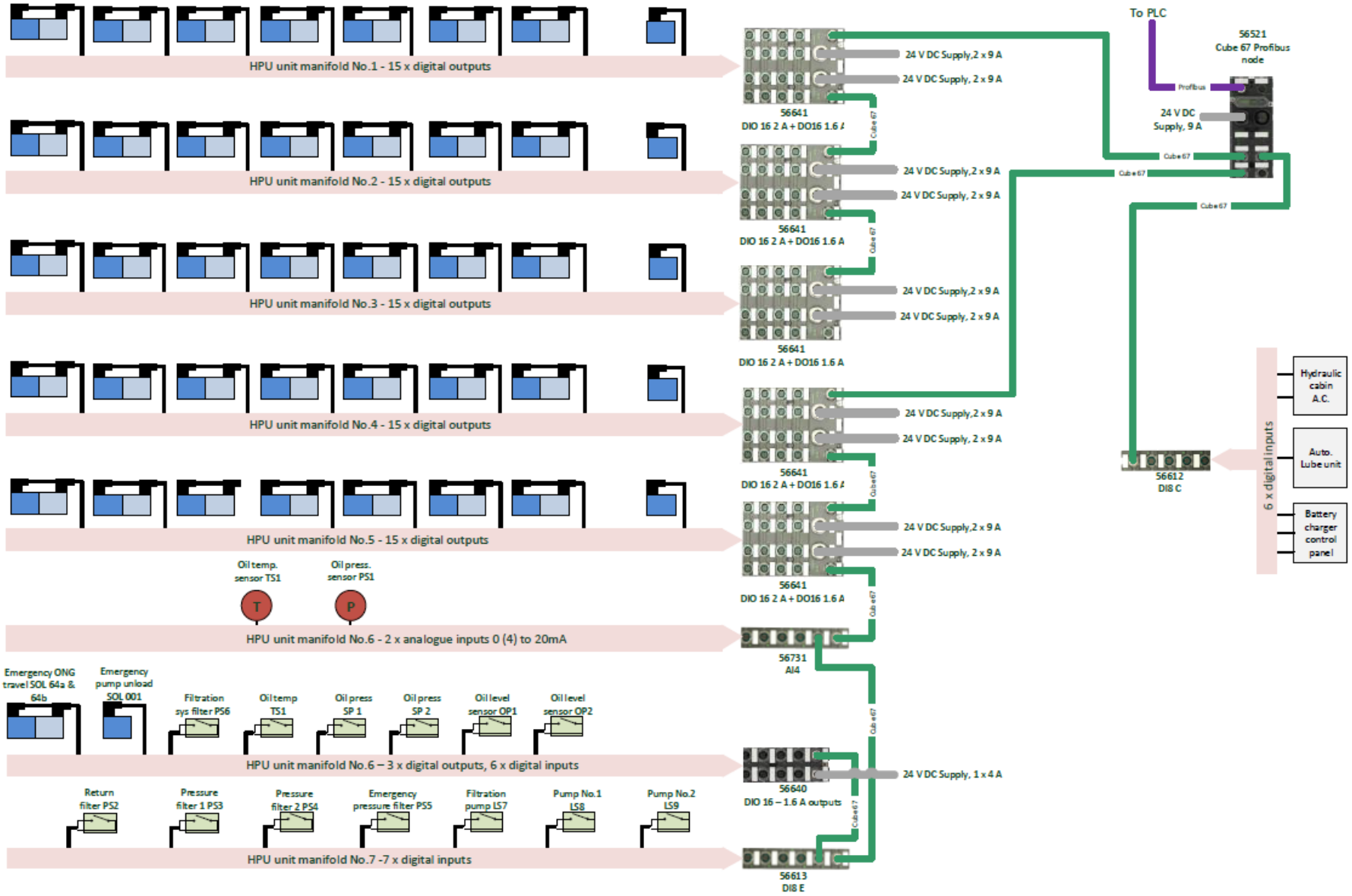

connec+ivity® by Murrelektronik

Murrelektronik Ltd
5 Albion St, Pendlebury Ind. Est.
Swinton, Manchester, M27 4FG

Customer:

Project:

Cube 67+ topology

Sales Engineer: Alison Ingham

Drawn by: Graham Traill

Date: 10/02/2015

Drawing. No: 1.02 Rev.2

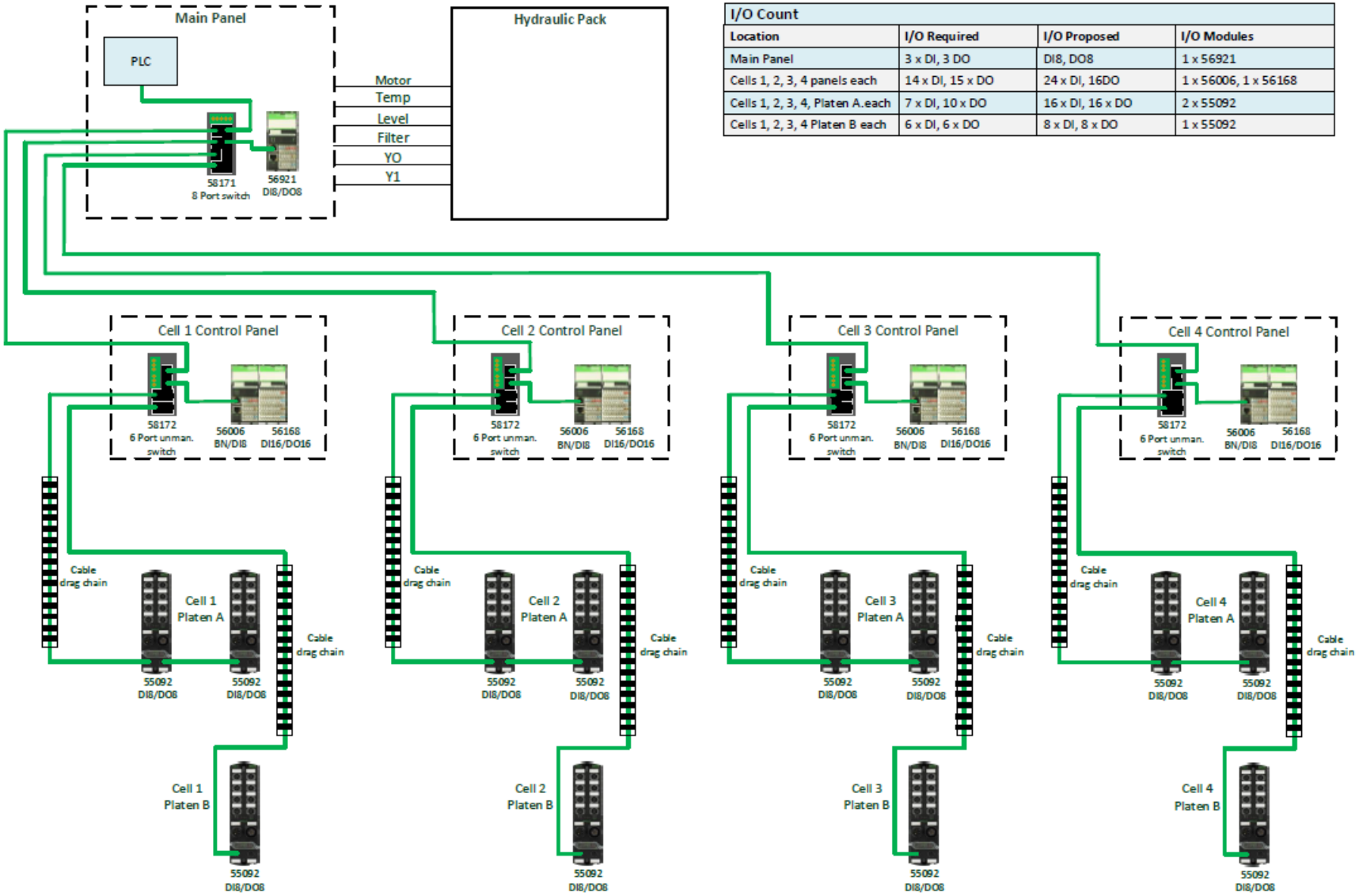

I/O Count			
Location	I/O Required	I/O Proposed	I/O Modules
Main Panel	3 x DI, 3 DO	DI8, DO8	1 x 56921
Cells 1, 2, 3, 4 panels each	14 x DI, 15 x DO	24 x DI, 16DO	1 x 56006, 1 x 56168
Cells 1, 2, 3, 4, Platen A.each	7 x DI, 10 x DO	16 x DI, 16 x DO	2 x 55092
Cells 1, 2, 3, 4 Platen B each	6 x DI, 6 x DO	8 x DI, 8 x DO	1 x 55092

connec+ivity® by Murrelektronik

Murrelektronik Ltd
5 Albion St, Pendlebury Ind. Est.
Swinton, Manchester, M27 4FG

Customer:
Project:

Profinet Topology

Sales Engineer: Alison Ingham
Drawn by: Graham Traill

Date: 26/06/2015
Drawing. No: 1.1

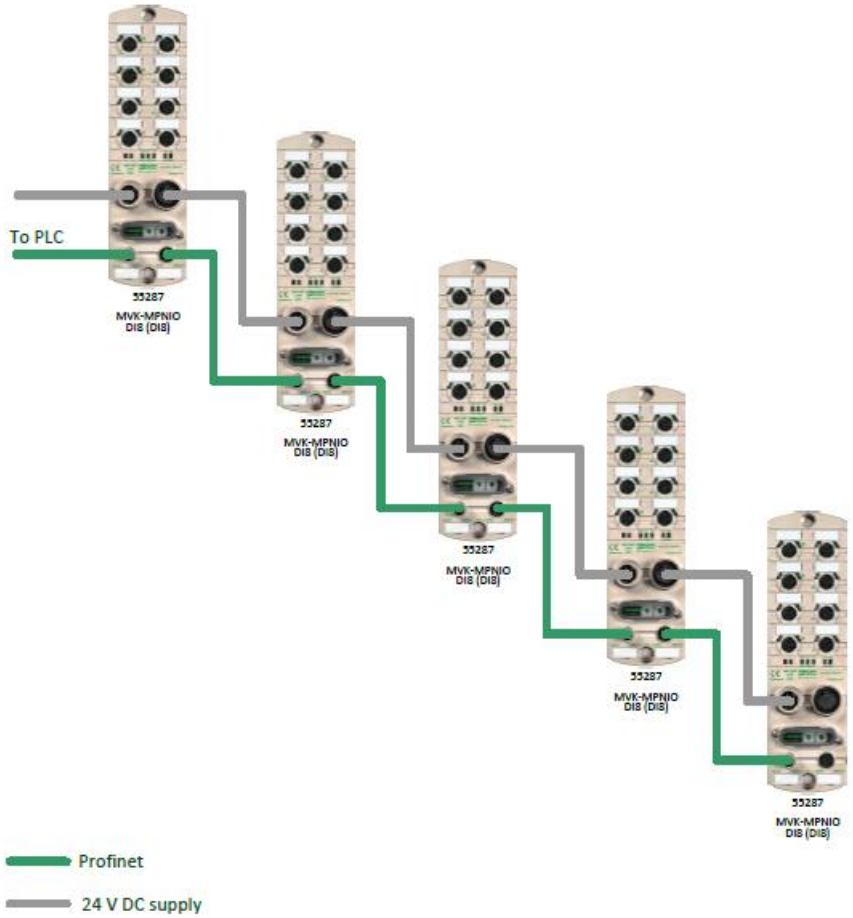

Line topology

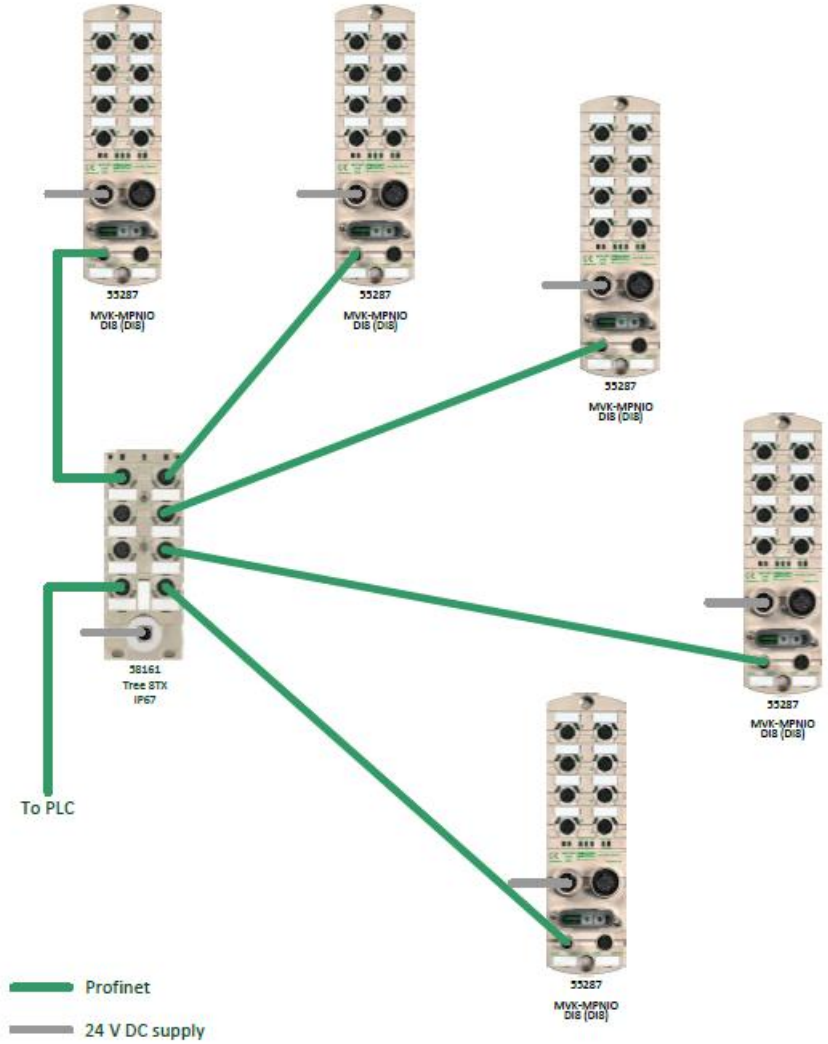

Star topology

connec+ivity® by Murrelektronik	Murrelektronik Ltd 5 Albion St, Pendlebury Ind. Est. Swinton, Manchester, M27 4FG	Customer: Project:	MVK I/O Modules Topology Options	Sales Engineer: Paul Hughes Drawn by: Graham Traill	Date: 29/10/2014 Revision: 0

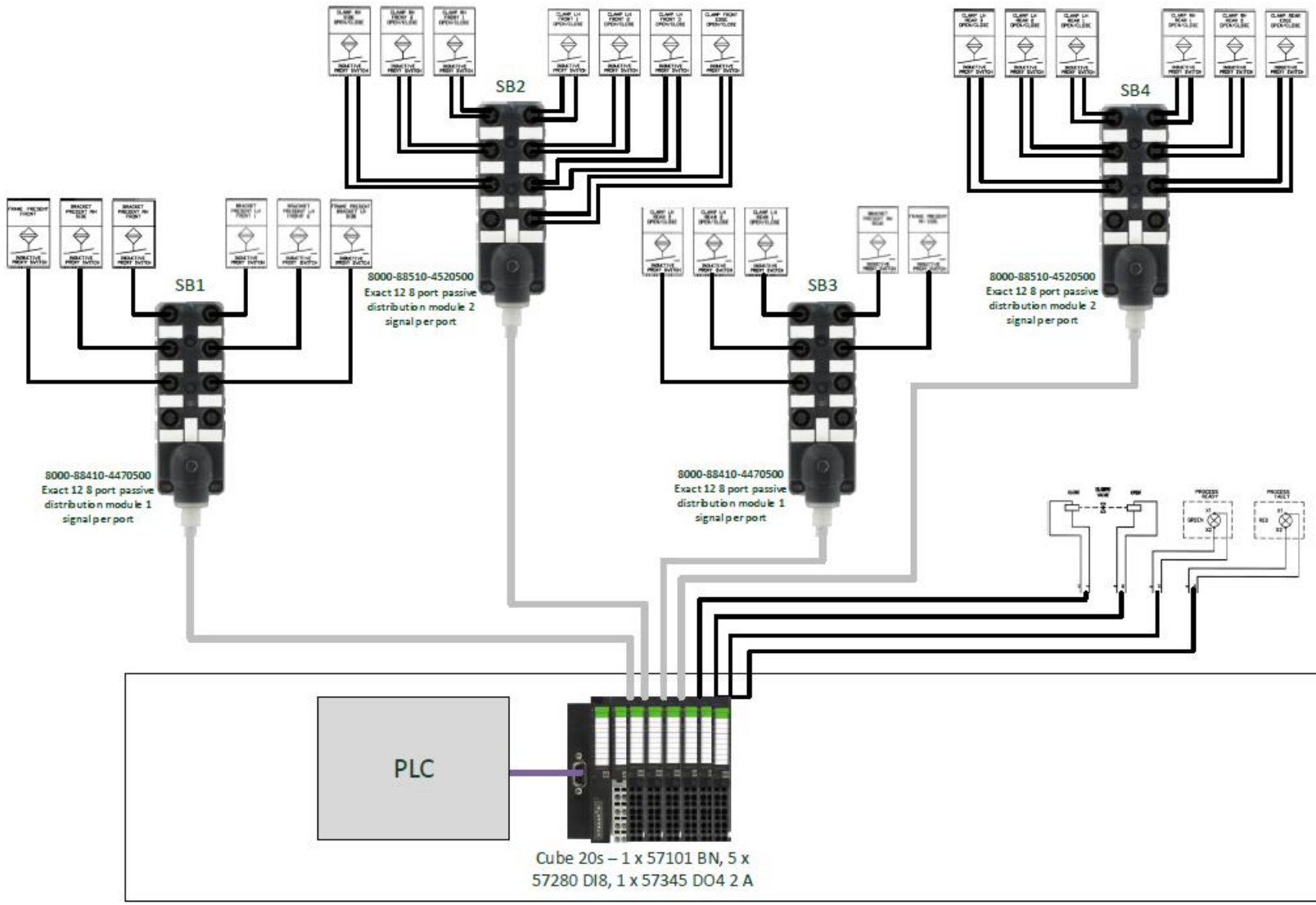

connec+ivity® by Murrelektronik	Murrelektronik Ltd 5 Albion St, Pendlebury Ind. Est. Swinton, Manchester, M27 4FG	Customer: Project:	Option 1 – Cube 20s with passive distribution boxes	Sales Engineer: Paul Hughes Drawn by: Graham Traill	Date: 05/03/2015 Revision: 0

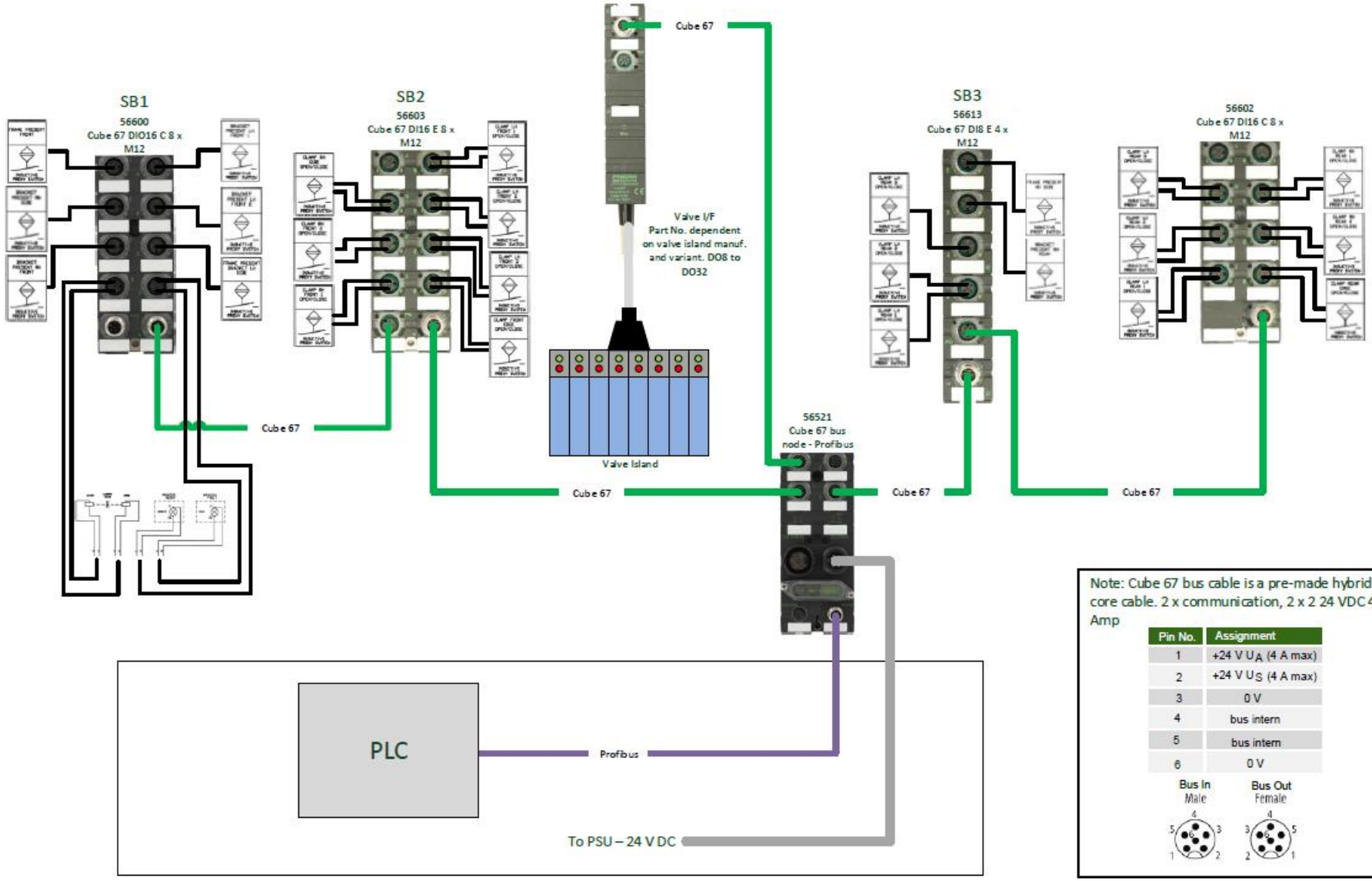

Note: Cube 67 bus cable is a pre-made hybrid 6 core cable. 2 x communication, 2 x 2 24 VDC 4 Amp

Pin No.	Assignment
1	+24 V U_A (4 A max)
2	+24 V U_S (4 A max)
3	0 V
4	bus intern
5	bus intern
6	0 V

Bus In Male — Bus Out Female

connec+ivity® by Murrelektronik

Murrelektronik Ltd
5 Albion St, Pendlebury Ind. Est.
Swinton, Manchester, M27 4FG

Customer:
Project:

Option 2 – Cube 67 including valve island interface

Sales Engineer: Paul Hughes
Drawn by: Graham Traill

Date: 05/03/2015
Revision: 0

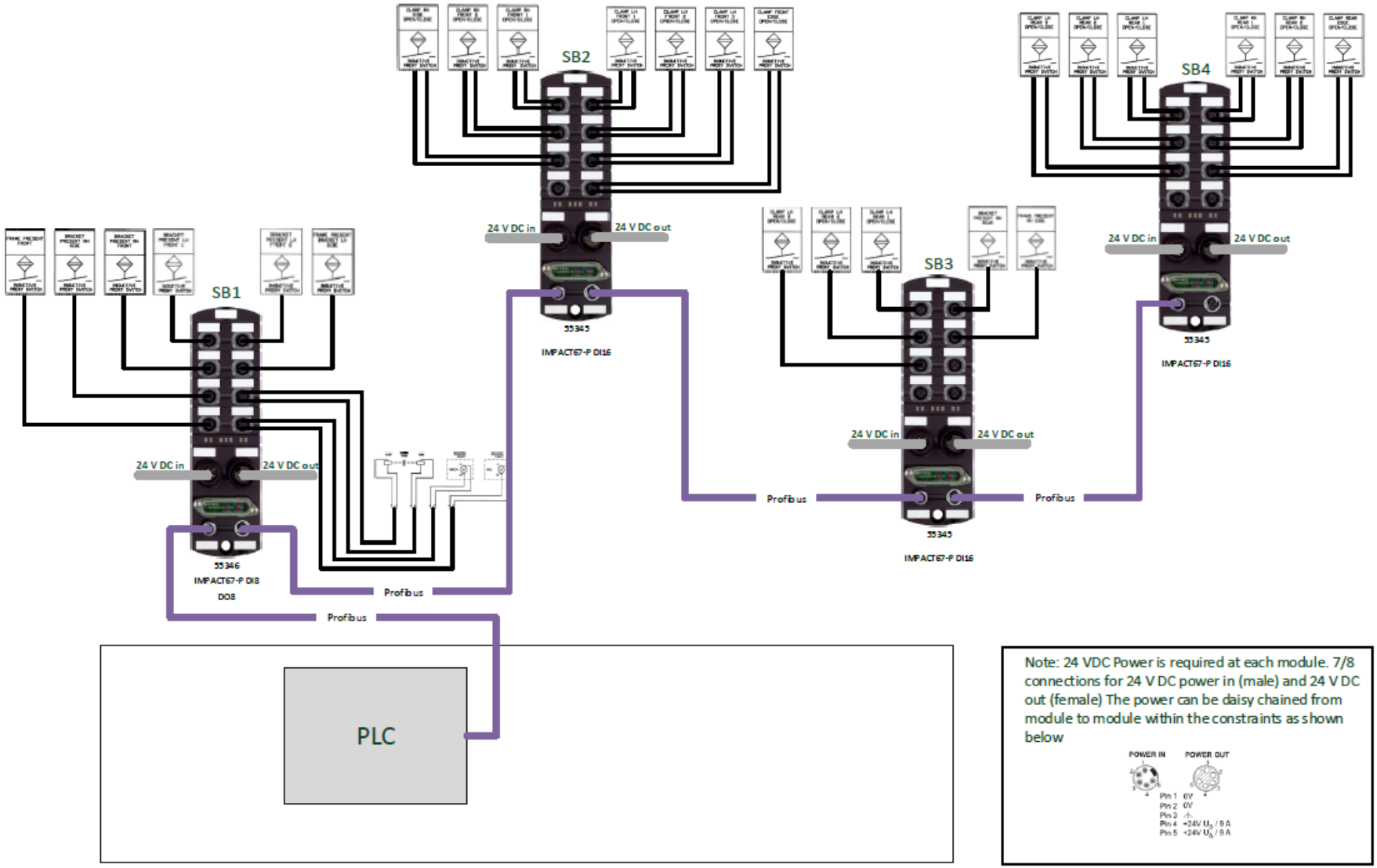

Note: 24 VDC Power is required at each module. 7/8 connections for 24 V DC power in (male) and 24 V DC out (female) The power can be daisy chained from module to module within the constraints as shown below

connec+ivity® by Murrelektronik	Murrelektronik Ltd 5 Albion St, Pendlebury Ind. Est. Swinton, Manchester, M27 4FG	Customer: . Project:	Option 3 – Impact 67 compact I/O	Sales Engineer: Paul Hughes Drawn by: Graham Traill	Date: 05/03/2015 Revision: 0

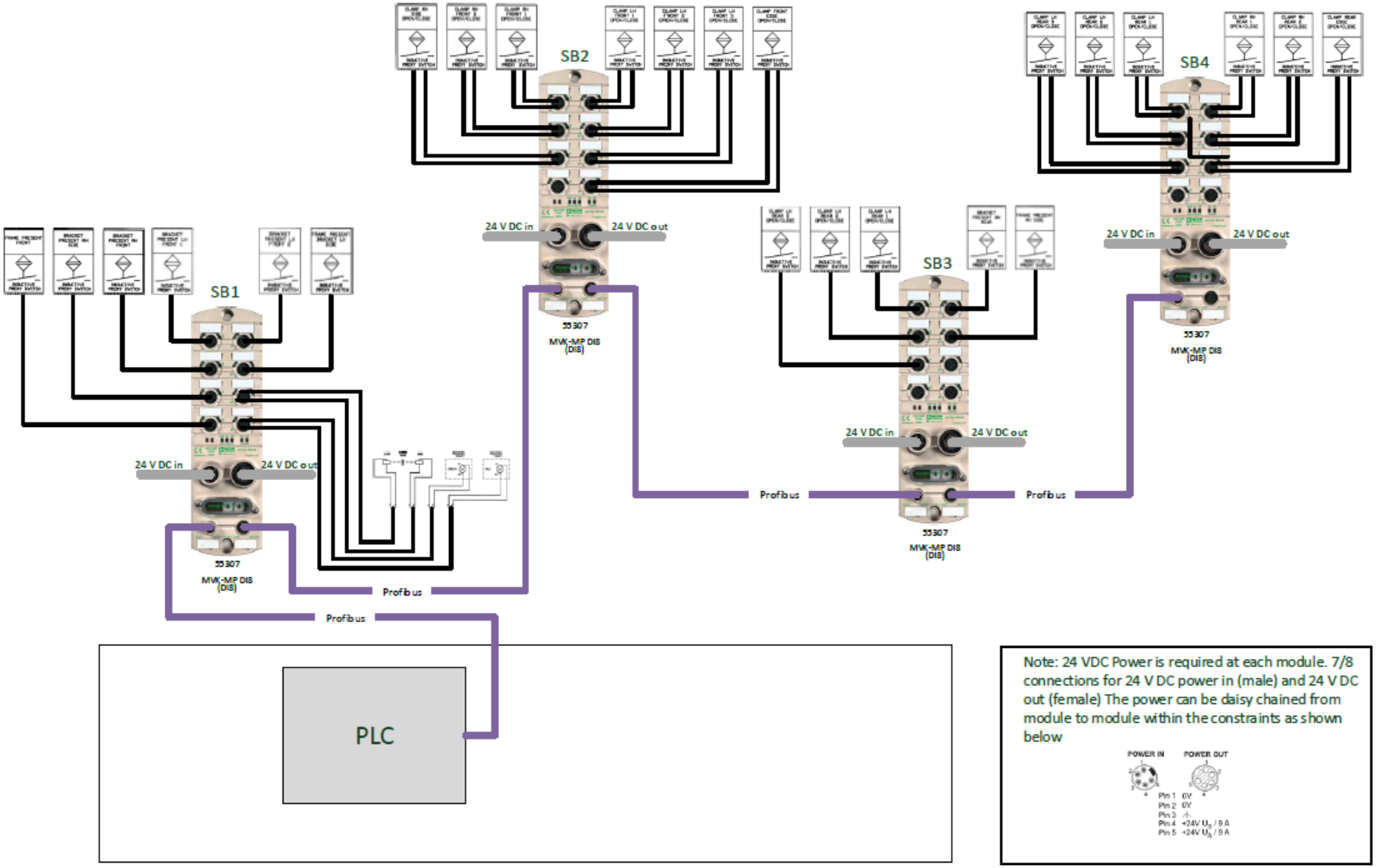

Note: 24 VDC Power is required at each module. 7/8 connections for 24 V DC power in (male) and 24 V DC out (female) The power can be daisy chained from module to module within the constraints as shown below

connec+ivity® by Murrelektronik	Murrelektronik Ltd 5 Albion St, Pendlebury Ind. Est. Swinton, Manchester, M27 4FG	Customer:	Option 4a – MVK metal compact I/O	Sales Engineer: Paul Hughes	Date: 05/03/2015
		Project:		Drawn by: Graham Traill	Revision: 0

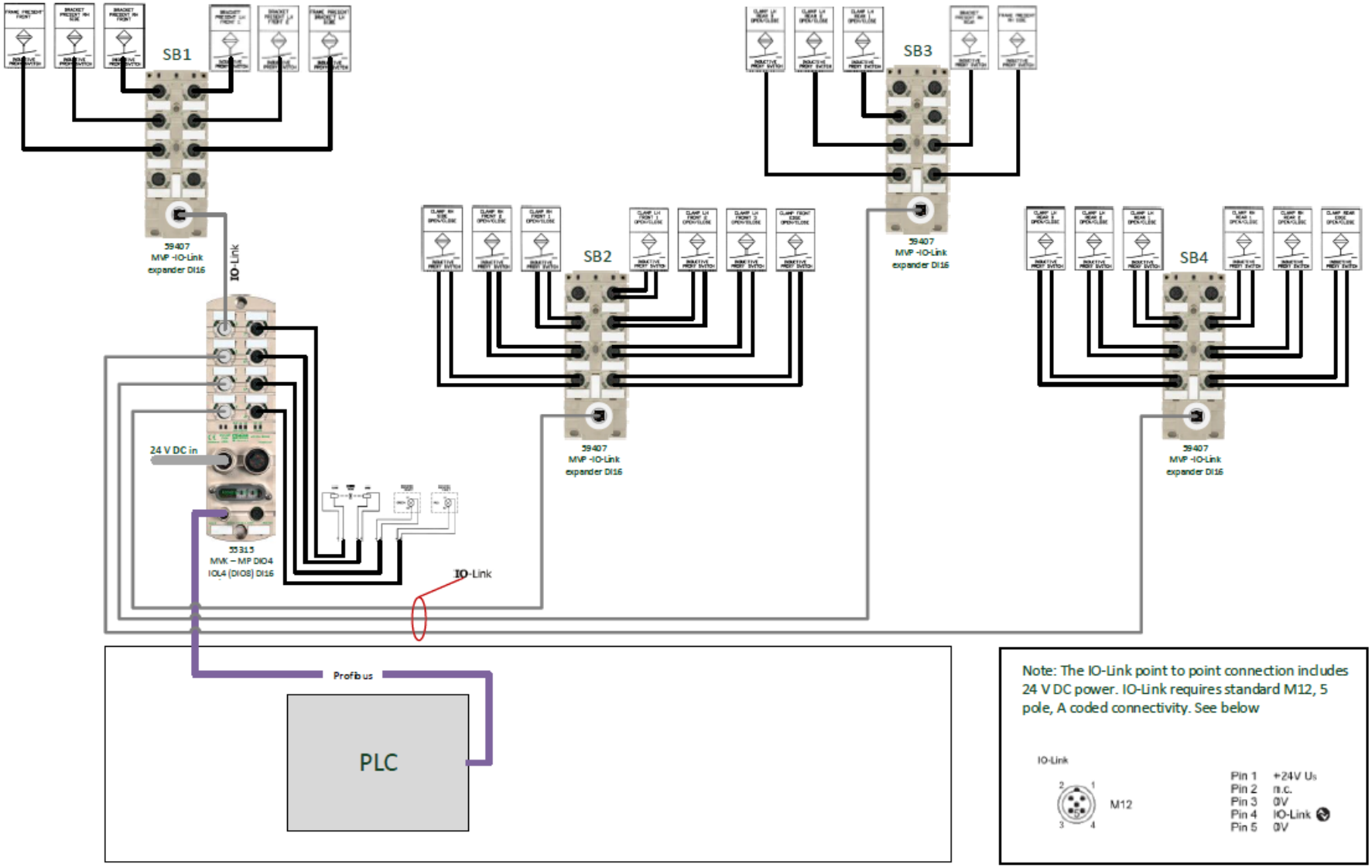

Note: The IO-Link point to point connection includes 24 V DC power. IO-Link requires standard M12, 5 pole, A coded connectivity. See below

IO-Link

M12

Pin 1	+24V Us
Pin 2	n.c.
Pin 3	0V
Pin 4	IO-Link
Pin 5	0V

connec+ivity® by Murrelektronik	Murrelektronik Ltd 5 Albion St, Pendlebury Ind. Est. Swinton, Manchester, M27 4FG	Customer:	Option 4b – MVK metal with MVP IO-Link expanders	Sales Engineer: Paul Hughes	Date: 05/03/2015
		Project:		Drawn by: Graham Traill	Revision: 0